LITEON
OPTOELECTRONICS

Infrared
Product Data Sheet
LTE-C9901

Spec No. :DS50-2017-0074
Effective Date: 03/03/2018
Revision: -

LITE-ON DCC

RELEASE

BNS-OD-FC001/A4

Infrared Emitter
LTE-C9901

1. Description

Lite-On offers a broad range of discrete infrared components for application such as remote control, IR wireless data transmission, security alarm & etc. Customers need infrared solutions featuring high power, high speed and wide viewing angels. The product line includes GaAs 940nm IREDs, AlGaAs high speed 850nm IREDs, PIN Photodiodes and Phototransistors. Photodiodes and Phototransistors can be provided with a filter that reduces digital light noise in the sensor function, which enables a high signal-to-noise ratio.

1. 1. Features

- Meet RoHS, Green Product.
- Package In 8mm Carrier Tape On 7" Diameter Reels..
- Compatible With Automatic Placement Equipment.
- Compatible With Infrared Reflow Solder Process.
- EIA STD package.
- Peak wavelength λp=940nm
- Top View With Water Clear Lens.

1.2. Applications

- Infrared emitter
- PCB Mounted Infrared Sensor

2. Outline Dimensions

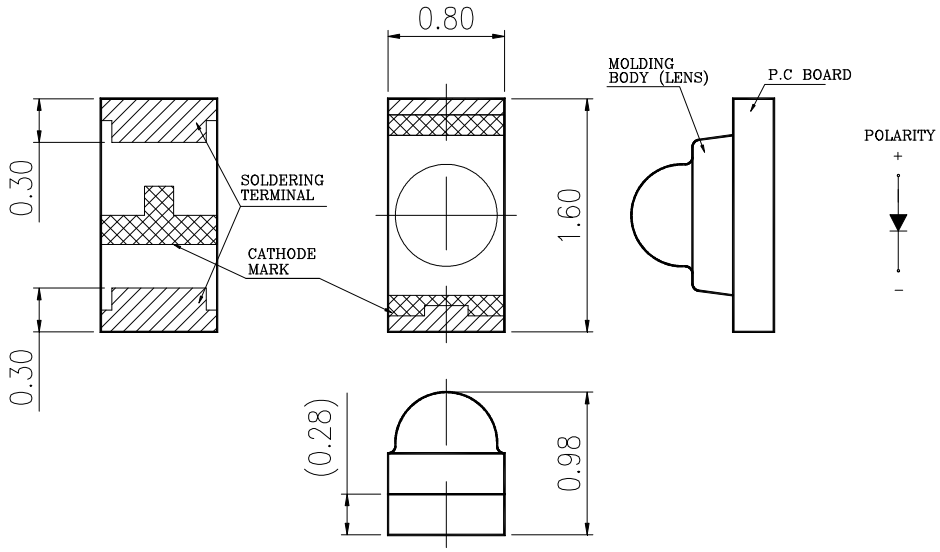

Notes :

1. All dimensions are in millimeters (inches).
2. Tolerance is ±0.1mm (.004") unless otherwise noted.
3. Specifications are subject to change without notice.

3. Absolute Maximum Ratings at TA=25℃

Parameter	Maximum Rating	Unit
Power Dissipation	100	mW
Peak Forward Current(300pps, 10μs pulse)	600	mA
DC Forward Current	60	mA
Reverse Voltage	5	V
Operating Temperature Range	-40℃ to + 85℃	
Storage Temperature Range	-55℃ to + 100℃	
Infrared Soldering Condition	260℃ for 10 Seconds Max.	

Suggestion IR Reflow Profile For Pb Free Process:

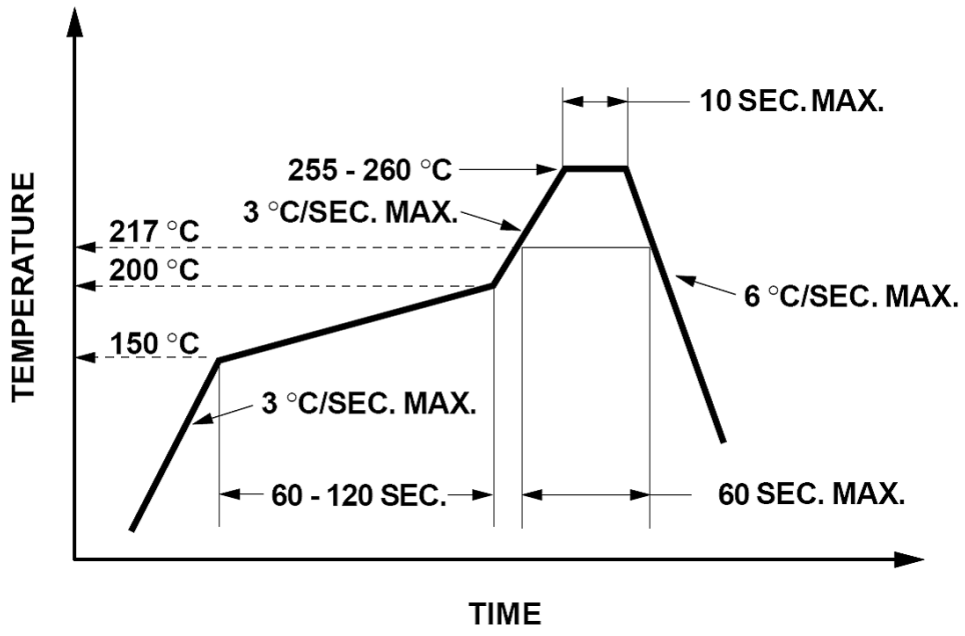

4. Electrical / Optical Characteristics at TA=25℃

Parameter	Symbol	Min.	Typ.	Max.	Unit	Test Condition
Radiant Intensity	I_E	5.0	8.0	10.0	mW/sr	I_F = 20mA
Peak Emission Wavelength	λ_{Peak}	-	940	-	nm	I_F = 20mA
Spectral Line Half-Width	$\Delta\lambda$	-	50	-	nm	I_F = 20mA
Forward Voltage	V_F	-	1.4	-	V	I_F = 20mA
Reverse Current	I_R	-	-	10	μA	V_R = 5V
Viewing Angle	$2\theta_{1/2}$	-	65	-	deg	

Note:

1. $\theta_{1/2}$ is the off-axis angle at which the luminous intensity is half the axial luminous intensity.
2. The dominant wavelength, λd is derived from the CIE chromaticity diagram and represents the single wavelength which defines the color of the device.
3. The test tolerance of I_E is ±15%.

6. Typical Electrical / Optical Characteristics Curves

(25℃ Ambient Temperature Unless Otherwise Noted)

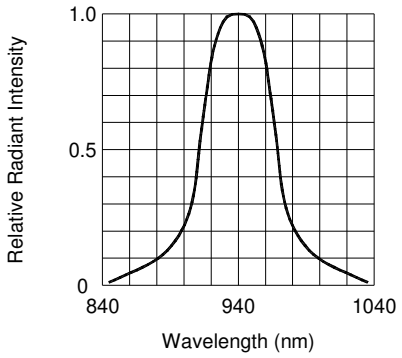

FIG.1 SPECTRAL DISTRIBUTION

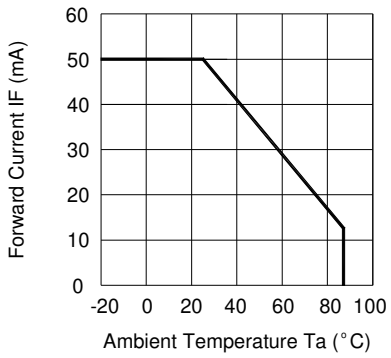

FIG.2 FORWARD CURRENT VS. AMBIENT TEMPERATURE

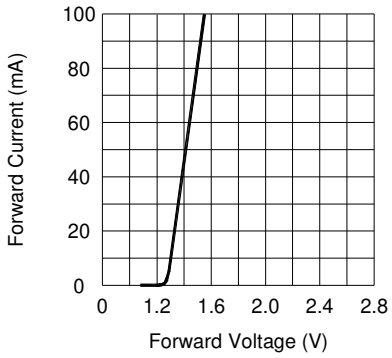

FIG.3 FORWARD CURRENT VS. FORWARD VOLTAGE

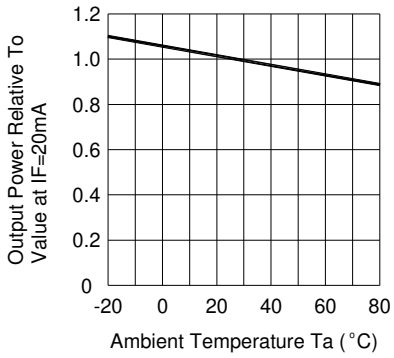

FIG.4 RELATIVE RADIANT INTENSITY VS. AMBIENT TEMPERATURE

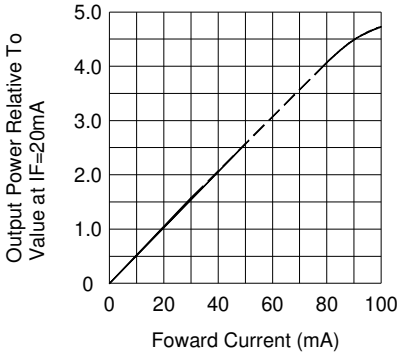

FIG.5 RELATIVE RADIANT INTENSITY VS. FORWARD CURRENT

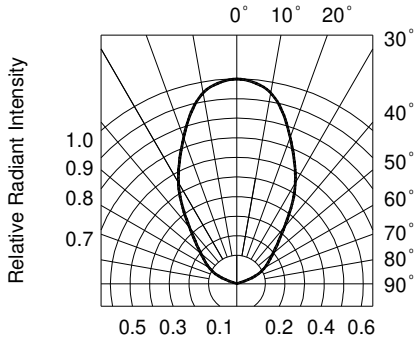

FIG.6 RADIATION DIAGRAM

7. Suggest Soldering Pad Dimensions

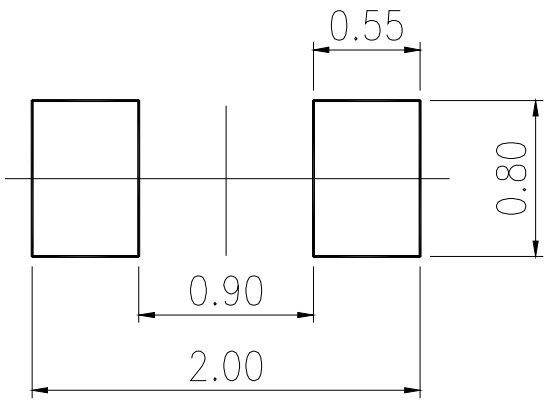

Note: It is recommended that the metal stencil used for solder paste printing has a thickness of 0.1mm (4mils) or 0.12mm (5mils).

8. Package Dimensions Of Tape And Reel

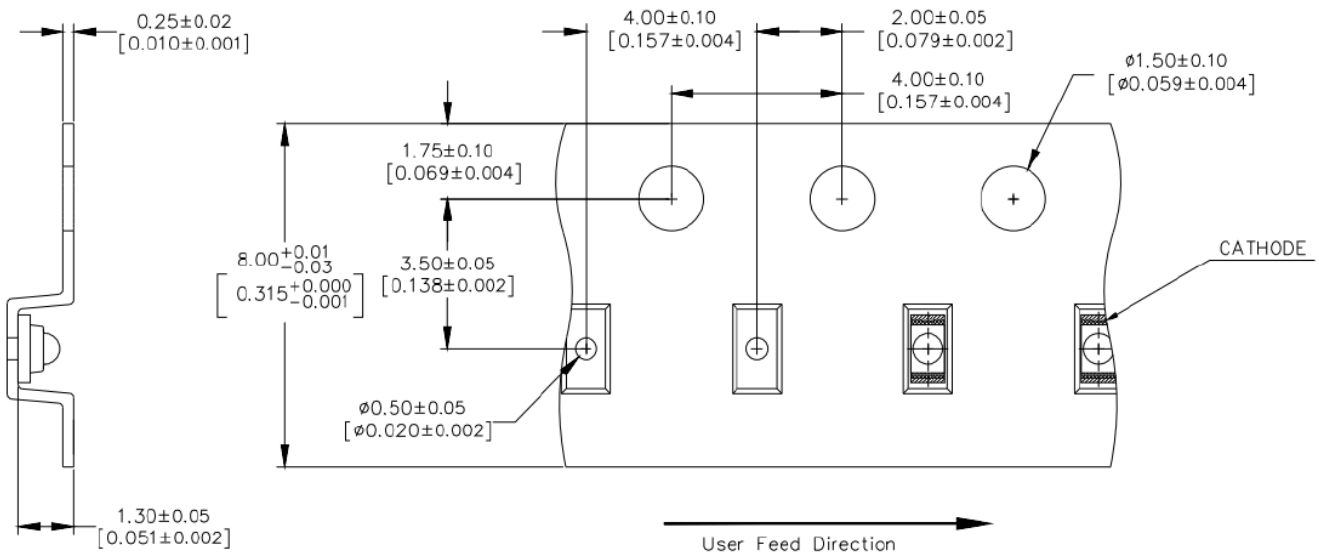

Note: All dimensions are in millimeters (inches).

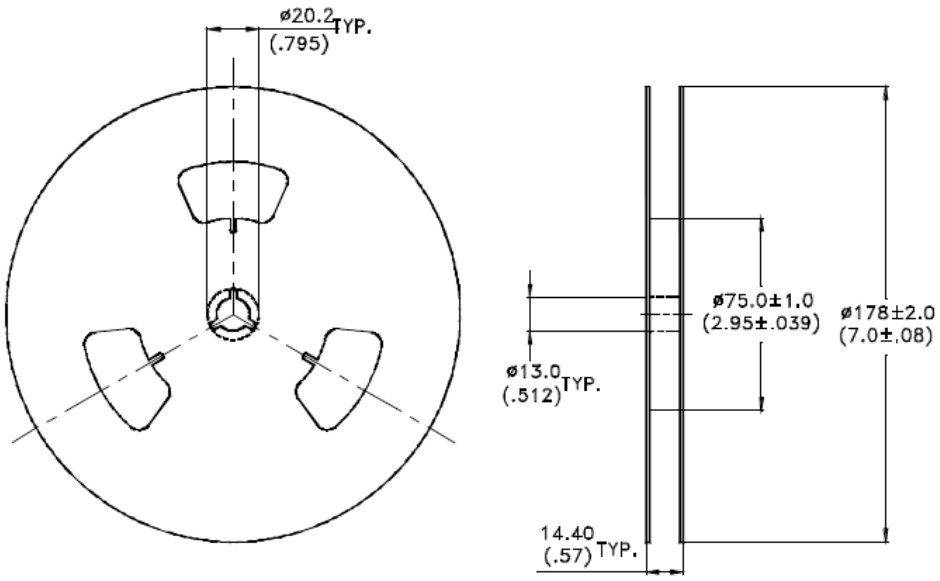

Note:

1. Empty component pockets sealed with top cover tape.
2. 7 inch reel- 3000 pieces per reel.
3. The maximum number of consecutive missing parts is two.
4. In accordance with ANSI/EIA 481-1-A-1994 specifications.

8. CAUTIONS

8.1. Application

The LEDs described here are intended to be used for ordinary electronic equipment (such as office equipment, communication equipment and household applications).Consult Liteon's Sales in advance for information on applications in which exceptional reliability is required, particularly when the failure or malfunction of the LEDs may directly jeopardize life or health (such as in aviation, transportation, traffic control equipment, medical and life support systems and safety devices).

8.2. Storage

The package is sealed:
The LEDs should be stored at 30℃ or less and 90%RH or less. And the LEDs are limited to use within one year, while the LEDs is packed in moisture-proof package with the desiccants inside.
The package is opened:
The storage ambient for the LEDs should not exceed 30℃ temperature or 60% relative humidity.
It is recommended that LEDs out of their original packaging are IR-reflowed within one week hrs.
For extended storage out of their original packaging, it is recommended that the LEDs be stored in a sealed container with appropriate desiccant, or in a desiccators with nitrogen ambient.
LEDs stored out of their original packaging for more than one week hrs should be baked at about 60 deg C for at least 20 hours before solder assembly.

8.3. Cleaning

Use alcohol-based cleaning solvents such as isopropyl alcohol to clean the LEDs if necessary.

8.4. Soldering

Recommended soldering conditions:

Reflow Soldering		Soldering iron	
Pre-heat Pre-heat time Peak temperature Soldering time	150~200℃ 120 seconds Max. 260℃ Max. 10 seconds Max.(Max. two times)	Temperature Soldering time	300℃ Max. 3 seconds Max. (one time one)

Because different board designs use different number and types of devices, solder pastes, reflow ovens, and circuit boards, no single temperature profile works for all possible combinations.

However, you can successfully mount your packages to the PCB by following the proper guidelines and PCB-specific characterization.

LITE-ON Runs both component-level verification using in-house KYRAMX98 reflow chambers and board-level assembly.

The results of this testing are verified through post-reflow reliability testing.

Profiles used at LITE-ON are based on JEDEC standards to ensure that all packages can be successfully and reliably surface mounted.

Figure on page3 shows a sample temperature profile compliant to JEDEC standards.

You can use this example as a generic target to set up your reflow process.

You should adhere to the JEDEC profile limits as well as specifications and recommendations from the solder paste manufacturer to avoid damaging the device and create a reliable solder joint.

8.5. Drive Method

An LED is a current-operated device. In order to ensure intensity uniformity on multiple LEDs connected in parallel in an application, it is recommended that a current limiting resistor be incorporated in the drive circuit, in series with each LED as shown in Circuit A below.

Circuit model (A)

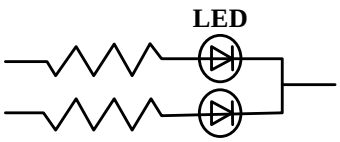

Circuit model (B)

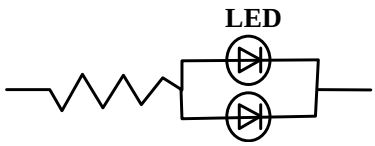

(A) Recommended circuit
(B) The brightness of each LED might appear different due to the differences in the I-V characteristics of those LEDs.

9. Others

The appearance and specifications of the product may be modified for improvement, without prior notice.