LITEON
OPTOELECTRONICS

SMD LED
Product Data Sheet
LTST-S225KRTGKT-Q

Spec No. :DS22-2021-0082
Effective Date: 05/07/2021
Revision: -

LITE-ON DCC

RELEASE

BNS-OD-FC001/A4

SMD LED
LTST-S225KRTGKT-Q

1. Description

SMD LED lamps from Lite-On are available in miniature sizes and special configurations for automated PC board assembly and space-sensitive applications. These SMD LED lamps are suitable for use in a wide variety of electronic equipment, including cordless and cellular phones, notebook computers, network systems, home appliances, and indoor signboard applications.

1.1 Features

- Meet ROHS.
- Side Looking Dual Color Chip LED With Tin Plating
- Ultra bright AlInGaP / InGaN Chip LED.
- Package in 8mm tape on 7" diameter reels.
- EIA STD package.
- I.C. compatible.
- Compatible With Automatic Placement Equipment
- Compatible With Infrared Reflow Solder Process

1.2 Applications

- Telecommunication, Office automation, home appliances, industrial equipment
- Keypad/Keyboard Backlighting
- Status indicator
- Micro-displays
- Signal and Symbol Luminary

2. Package Dimensions

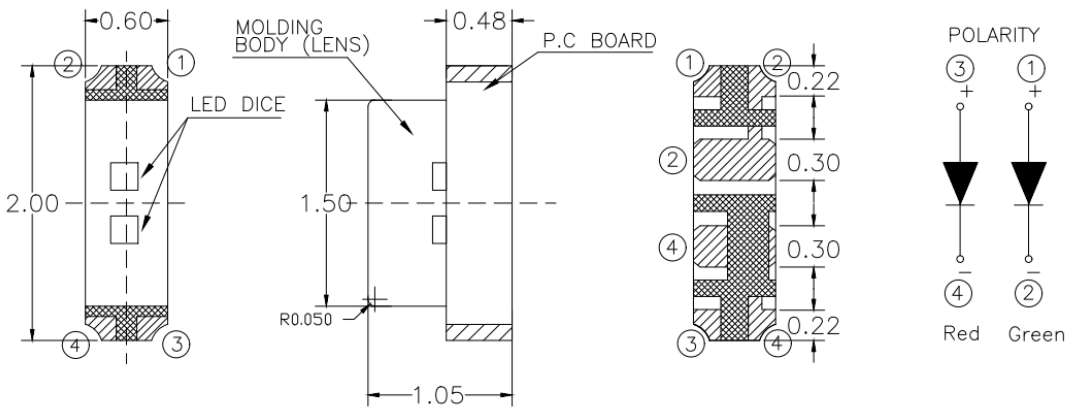

Part No.	Lens Color	Source Color	Pin Assignment
LTST-S225KRTGKT-Q	Water Clear	AlInGaP Red	3,4
		InGaN Green	1,2

Notes:

1. All dimensions are in millimeters.
2. Tolerance is ±0.1 mm (.004") unless otherwise noted.

3. Rating and Characteristics

3.1 Absolute Maximum Ratings at Ta=25℃

Parameter	LTST-S225KRTGKT-Q		Unit
	Red	Green	
Power Dissipation	50	38	mW
Peak Forward Current (1/10 Duty Cycle, 0.1ms Pulse Width)	40	40	mA
DC Forward Current	20	10	mA
Operating Temperature Range	-20 ºC to + 80 ºC		
Storage Temperature Range	-30 ºC to + 85 ºC		
Infrared Soldering Condition	260 ℃ For 10 Seconds		

3.2 Suggest IR Reflow Condition For Pb Free Process:

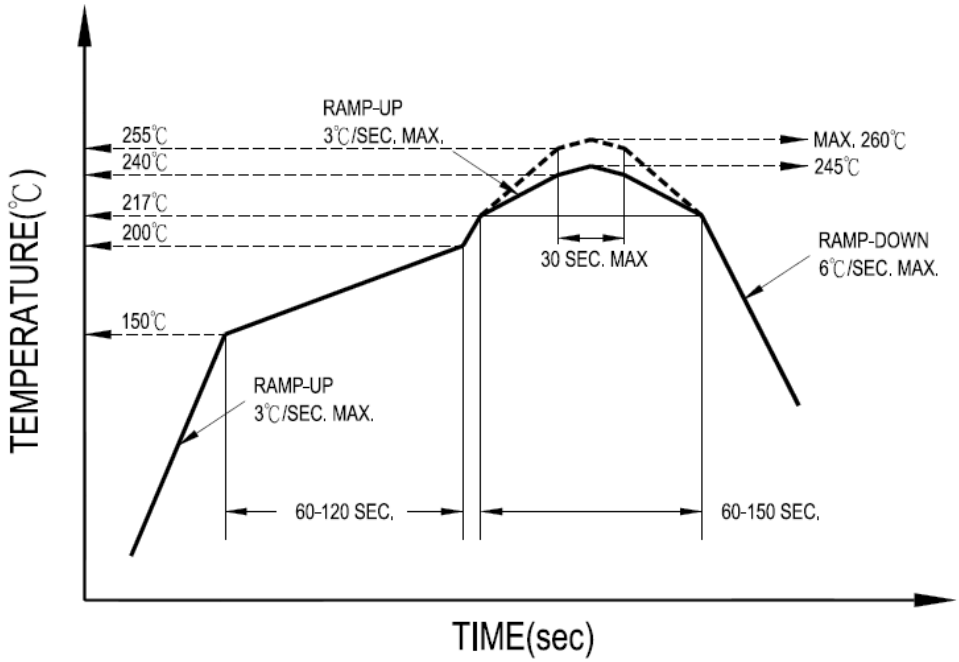

3.3 Electrical / Optical Characteristics at Ta=25℃

Parameter	Symbol		LTST-S225KRTGKT-Q		Unit	Test Condition
			Red	Green		
Luminous Intensity	IV	Min	11.2	56.0	mcd	IF = 5mA Note 1
		Typ	-	-		
		Max	28.0	140.0		
Viewing Angle	$2\theta_{1/2}$	Typ	130.0		deg	Note 2 Fig.5
Peak Emission Wavelength	λP	Typ	639.0	525.0	nm	Measurement @Peak (Fig.1)
Dominant Wavelength	λd	Min	617.0	520.0	nm	IF = 5mA Note 3
		Typ	-	-		
		Max	633.0	535.0		
Spectral Line Half-Width	Δλ	Typ	20.0	35.0	nm	
Forward Voltage	VF	MIN	1.6	2.6	V	IF = 5mA
		Typ	-	-		
		Max	2.3	3.5		
Reverse Current	IR	Max	10	10	μA	VR = 5V Note 5

Notes:

1. Luminous intensity is measured with a light sensor and filter combination that approximates the CIE eye-response curve.
2. θ1/2 is the off-axis angle at which the luminous intensity is half the axial luminous intensity.
3. The dominant wavelength, λd is derived from the CIE chromaticity diagram and represents the single wavelength which defines the color of the device.
4. Caution in ESD:

   Static Electricity and surge damages the LED. It is recommend to use a wrist band or anti-electrostatic glove when handling the LED. All devices, equipment and machinery must be properly grounded.
5. Reverse voltage (VR) condition is applied to IR test only. The device is not designed for reverse operation

4. Bin Rank

4.1 Bin code list

■ IV Rank

Luminous Intensity Color : Red , Unit : mcd @5mA		
Bin Code	Min	Max
L	11.2	18.0
M	18.0	28.0

Tolerance on each Luminous Intensity bin is +/- 15%

Luminous Intensity Color : Green , Unit : mcd @5mA		
Bin Code	Min	Max
P2	56.0	71.0
Q1	71.0	90.0
Q2	90.0	112.0
R1	112.0	140.0

Tolerance on each Luminous Intensity bin is +/- 15%

■ Hue Rank

Dominant Wavelength Color : Green , Unit: nm @5mA		
Bin Code	Min	Max
AP	520.0	525.0
AQ	525.0	530.0
AR	530.0	535.0

Tolerance foreach Dominate Wavelength bin is +/-1nm

5. Typical Electrical / Optical Characteristics Curves.

(25℃ Ambient Temperature Unless Otherwise Noted)

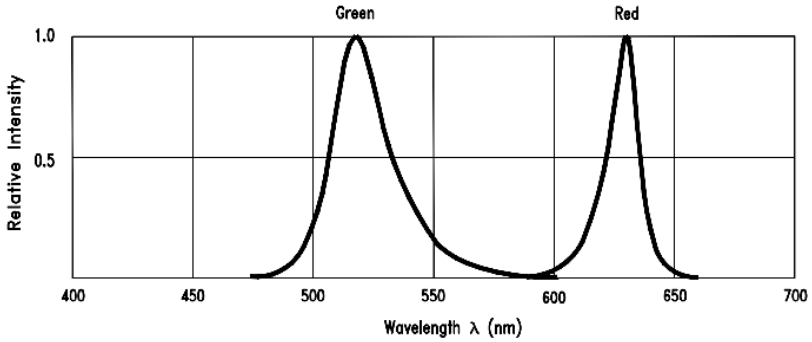

Fig.1 Relative Intensity vs. Wavelength

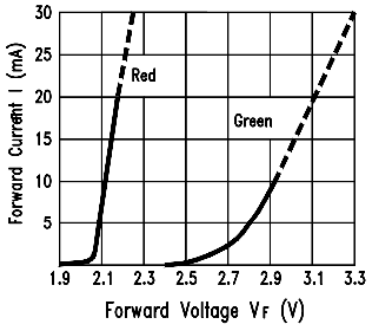

Fig.2 Forward Current vs. Forward Voltage

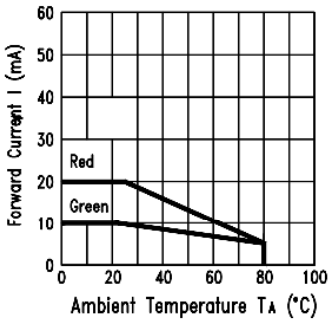

Fig.3 Forward Current Derating Curve

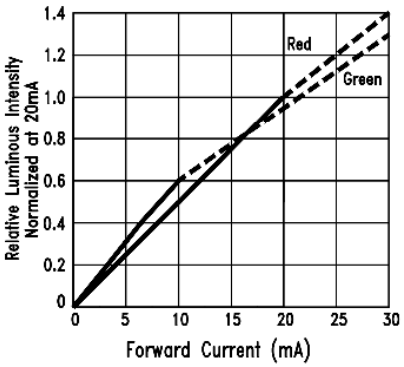

Fig.4 Relative Luminous Intensity vs. Forward Current

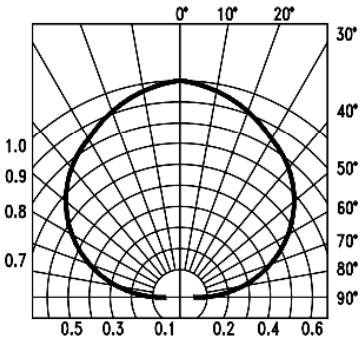

Fig.5 Spatial Distribution

6. User Guide

6.1 Cleaning

Do not use unspecified chemical liquid to clean LED they could harm the package.
If clean is necessary, immerse the LED in ethyl alcohol or in isopropyl alcohol at normal temperature for less one minute.

6.2 Recommend Printed Circuit Board Attachment Pad and Soldering direction

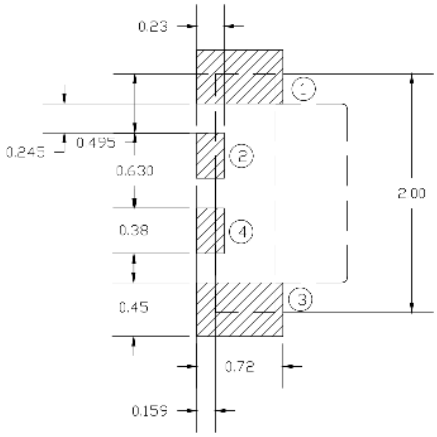

6.3 Package Dimensions Of Tape And Reel

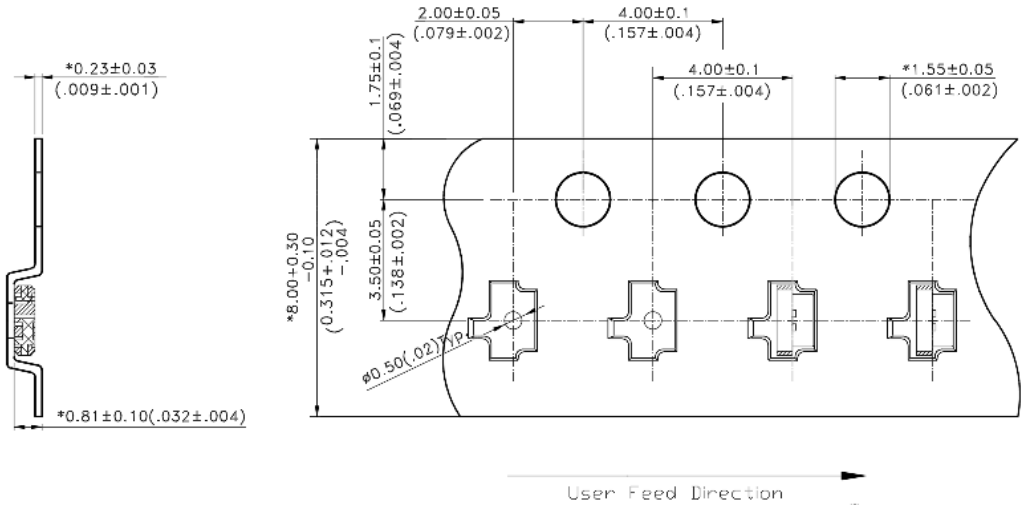

Note:

1. All dimensions are in millimeters (inches).

6.4 Package Dimensions of Reel

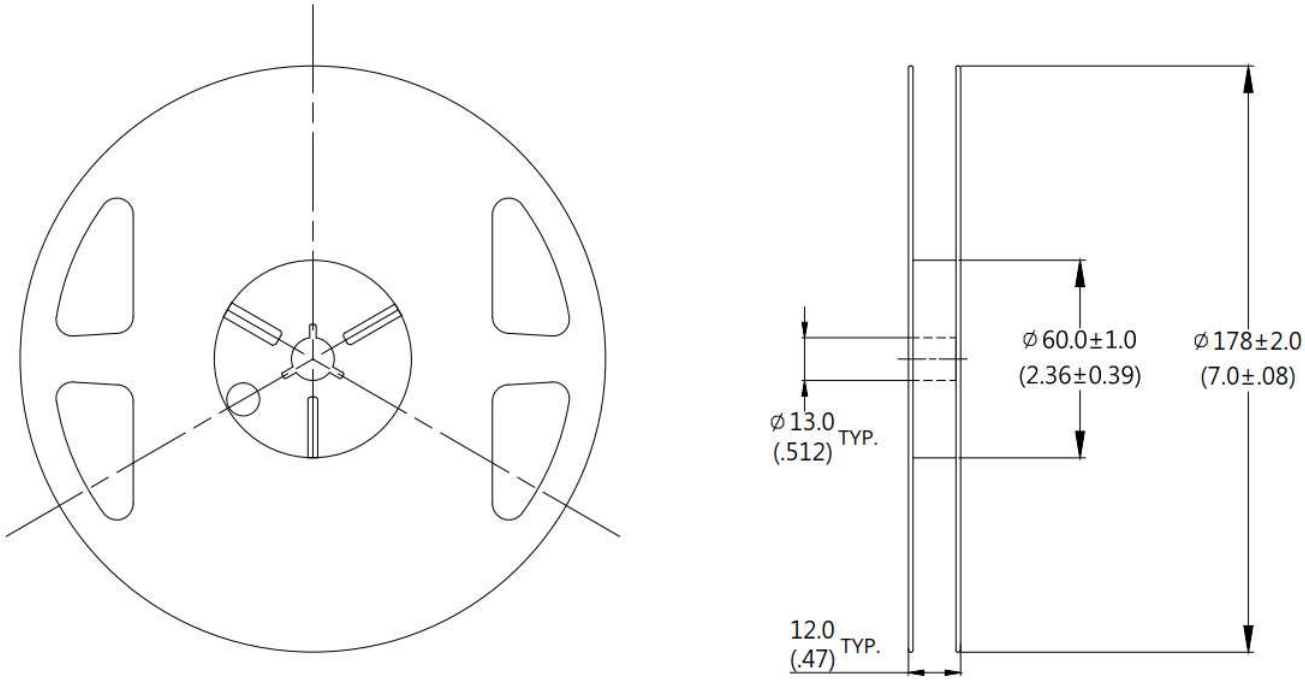

Notes:

1. Empty component pockets sealed with top cover tape.
2. 7 inch reel-4000 pieces per reel.
3. Minimum packing quantity is 500 pieces for remainders.
4. The maximum number of consecutive missing lamps is two.
5. In accordance with ANSI/EIA 481 specifications.

7. Cautions

7.1 Application

The LEDs described here are intended to be used for ordinary electronic equipment (such as office equipment, communication equipment and household applications).Consult Liteon's Sales in advance for information on applications in which exceptional reliability is required, particularly when the failure or malfunction of the LEDs may directly jeopardize life or health (such as in aviation, transportation, traffic control equipment, medical and life support systems and safety devices).

7.2 Storage

The package is sealed:
The LEDs should be stored at 30℃ or less and 90%RH or less. And the LEDs are limited to use within one year, while the LEDs is packed in moisture-proof package with the desiccants inside.
The package is opened:
The storage ambient for the LEDs should not exceed 30℃ temperature or 60% relative humidity.
It is recommended that LEDs out of their original packaging are IR-reflowed within one week. (MSL 3).
For extended storage out of their original packaging, it is recommended that the LEDs be stored in a sealed container with appropriate desiccant, or in a desiccators with nitrogen ambient.
LEDs stored out of their original packaging for more than one week should be baked at about 60 deg C for at least 20 hours before solder assembly.

7.3 Cleaning

Use alcohol-based cleaning solvents such as isopropyl alcohol to clean the LED if necessary.

7.4 Soldering

Recommended soldering conditions:

Reflow soldering		Soldering iron	
Pre-heat	150~200℃	Temperature	300℃ Max.
Pre-heat time	120 sec. Max.	Soldering time	3 sec. Max. (one time only)
Peak temperature	260℃ Max.		
Soldering time	10 sec. Max.(Max. two times)		

Notes:

Because different board designs use different number and types of devices, solder pastes, reflow ovens, and circuit boards, no single temperature profile works for all possible combinations.
However, you can successfully mount your packages to the PCB by following the proper guidelines and PCB-specific characterization.
LITE-ON Runs both component-level verification using in-LRuse **KYRAMX98** reflow chambers and board-level assembly.
The results of this testing are verified through post-reflow reliability testing. Profiles used at LITE-ON are based on JEDEC standards to ensure that all packages can be successfully and reliably surface mounted.
Figure on page3 shows a sample temperature profile compliant to JEDEC standards. You can use this example as a generic target to set up your reflow process. You should adhere to the JEDEC profile limits as well as specifications and recommendations from the solder paste manufacturer to avoid damaging the device and create a reliable solder joint.

7.5 Drive Method

A LED is a current-operated device. In order to ensure intensity uniformity on multiple LEDs connected in parallel in an application, it is recommended that a current limiting resistor be incorporated in the drive circuit, in series with each LED as shown in Circuit A below.

Circuit model A

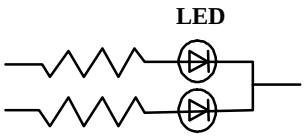

Circuit model B

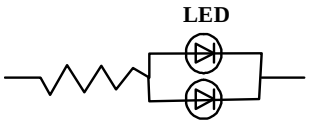

(A) Recommended circuit.
(B) The brightness of each LED might appear different due to the differences in the I-V characteristics of those LEDs.

7.6 ESD (Electrostatic Discharge)

Static Electricity or power surge will damage the LED.
Suggestions to prevent ESD damage:

- Use of a conductive wrist band or anti-electrostatic glove when handling these LEDs.
- All devices, equipment, and machinery must be properly grounded.
- Work tables, storage racks, etc. should be properly grounded.
- Use ion blower to neutralize the static charge which might have built up on surface of the LED's plastic lens as a result of friction between LEDs during storage and handling.

ESD-damaged LEDs will exhibit abnormal characteristics such as high reverse leakage current, low forward voltage, or " no lightup " at low currents.
To verify for ESD damage, check for " lightup " and Vf of the suspect LEDs at low currents.
The Vf of " good " LEDs should be >2.0V@0.1mA for InGaN product and >1.4V@0.1mA for AlInGaP product.

8. Reliability Test

Classification	Test Item	Test Condition	Reference Standard
Endurance Test	Operation Life	Ta= Under Room Temperature As Per Data Sheet Maximum Rating *Test Time= 1000HRS (-24HRS,+72HRS)	MIL-STD-750D:1026 MIL-STD-883D:1005 JIS C 7021:B-1
	High Temperature High Humidity Storage	IR-Reflow In-Board, 2 Times Ta= 65±5℃,RH= 90～95% *Test Time= 240HRS±2HRS	MIL-STD-202F:103B JIS C 70 1:B-11
	High Temperature Stor g	Ta= 105±5℃ *Test Time= 1000HRS (-24HRS,+72HRS)	MIL-STD-883D:1008 JIS C 7021:B-10
	Low Temperature Storage	Ta= -55±5℃ *Test Time=1000HRS (-24HRS,+72H RS)	IS C 7021:B-12
Environmental Test	Temperature Cyclin	105 ºC ～ 25 ºC ～ -55 ºC ～ 25 ºC 30mins 5mins 30mins 5mins 10 Cycles	MIL-STD-202F:107D MIL-STD-750D:1051 MIL-STD-883D:1010 JIS C 7021:A-4
	Thermal Shock	IR-Reflow In-Board, 2 Times 85 ± 5℃ ～ -40℃ ± 5℃ 10mins 10mins 10 Cycles	MIL-STD-202F:107D MIL-STD-750D:1051 MIL-STD-883D:1011
	Solder esist nce	T.sol= 260 ± 5 ºC Dwell Time= 10 ± 1secs	MIL-STD-202F:210A MIL-STD-750D:2031 JIS C 7021:A-1
	IR-Reflow	Ramp-up rate(217 ºC to Peak) +3 ºC / second max Temp. maintain at 175(±25) ºC 180 seconds max Temp. maintain above 217 ºC 60-150 seconds Peak temperature range 260 ºC +0/-5 ºC Time within 5℃ of actual Peak Temperature (tp) 10-30 seconds Ramp-down rate +6 ºC /second max	MIL-STD-750D:2031.2 J-STD-020D
	Solder Ability	T.sol= 235 ± 5 ºC Immersion time 2±0.5 sec Immersion rate 25±2.5 mm/sec Coverage ≧95% of the dipped surface	MIL-STD-202F:208D MIL-STD-750D:2026 MIL-STD-883D:2003 IEC 68 Part 2-20 JIS C 7021:A-2

9. Others

The appearance and specifications of the product may be modified for improvement without prior notice.

10. Suggested Checking List

Training and Certification

1. Everyone working in a static-safe area is ESD-certified?
2. Training records kept and re-certification dates monitored?

Static-Safe Workstation & Work Areas

1. Static-safe workstation or work-areas have ESD signs?
2. All surfaces and objects at all static-safe workstation and within 1 ft measure less than 100V?
3. All ionizer activated, positioned towards the units?
4. Each work surface mats grounding is good?

Personnel Grounding

1. Every person (including visitors) handling ESD sensitive (ESDS) items wears wrist strap, heel strap or conductive shoes with conductive flooring?
2. If conductive footwear used, conductive flooring also present where operator stand or walk?
3. Garments, hairs or anything closer than 1 ft to ESD items measure less than 100V*?
4. Every wrist strap or heel strap/conductive shoes checked daily and result recorded for all DLs?
5. All wrist strap or heel strap checkers calibration up to date?

Note: *50V for InGaN LED.

Device Handling

1. Every ESDS items identified by EIA-471 labels on item or packaging?
2. All ESDS items completely inside properly closed static-shielding containers when not at static-safe workstation?
3. No static charge generators (e.g. plastics) inside shielding containers with ESDS items?
4. All flexible conductive and dissipative package materials inspected before reuse or recycles?

Others

1. Audit result reported to entity ESD control coordinator?
2. Corrective action from previous audits completed?
3. Are audit records complete and on file?