LITEON®
OPTOELECTRONICS

SMD LED

Product Data Sheet

LTSA-E67RVAWTU

Spec No. :
Created Date: 2017/12/04
Revision:-1.0

SMD LED

LTSA-E67RVAWTU

Rev	Description	By	Date
1.0	New data sheet	Winston Chu	12/04/2017
Above data for PD and Customer tracking only			

Customer Name:

Customer Signature: **Print Name:**

LiteON Sales Signature: **Print Name:**

SMD LED
LTSA-E67RVAWTU

1. Description

SMD LEDs from Lite-On are available in miniature sizes and special configurations for automated PC board assembly and space-sensitive applications. These SMD LEDs are suitable for use a wide variety of electronic equipment, e.g.: cordless and cellular phones, notebook computers and network systems etc..

1.1 Features

- Meet ROHS
- Package in 8mm tape on 7" diameter reels
- Preconditioning: accelerate to JEDEC level 2a
- Qualification is based on AEC-Q101 Ver. D
- EIA STD package
- I.C. compatible
- Compatible with automatic placement equipment
- Compatible with infrared reflow solder process

1.2 Applications

- Automotive: accessary applications

2. Package Dimensions

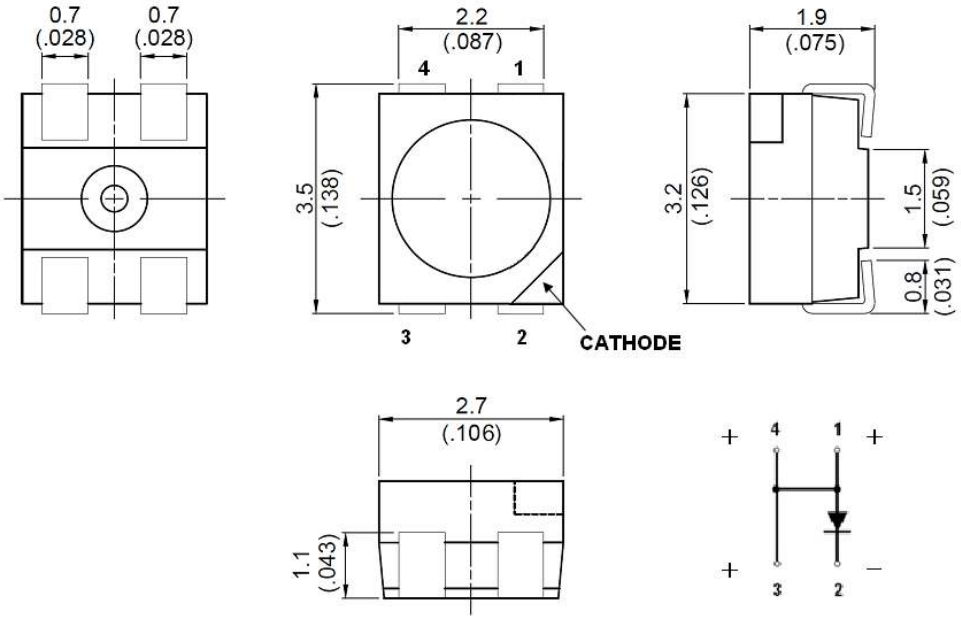

Part No.	Lens Color	Source Color
LTSA-E67RVAWTU	Diffused	AlInGaP Amber

Notes:

1. All dimensions are in millimeters.
2. Tolerance is ±0.2 mm (.008") unless otherwise noted.

3. Rating and Characteristics

3.1 Absolute Maximum Ratings at Ta=25°C

Parameter	LTSA-E67RVAWTU	Unit
Power Dissipation	175	mW
Peak Forward Current (1/10 Duty Cycle, 0.1ms Pulse Width)	100	mA
DC Forward Current	70	mA
Operating Temperature Range	-40°C to + 100°C	
Storage Temperature Range	-40°C to + 100°C	

3.2 Thermal Characteristics

Parameter	Symbol	TYP.	MAX.	Unit
Thermal Resistance (Junction – Ambient)Note	Rth_{JA}	280	-	°C /W
Thermal Resistance (Junction – Solder Point)Note	Rth_{JS}	130	-	°C /W
Junction Temperature	T_J	-	125	°C

Note: Rth_{JA} Measurement Condition

Substrate: FR4 (t=1.6mm) / Pattern Size: 16mm^2

3.3 Suggest IR Reflow Condition for Pb Free Process:

IR-Reflow Soldering Profile for lead free soldering (Acc. to J-STD-020)

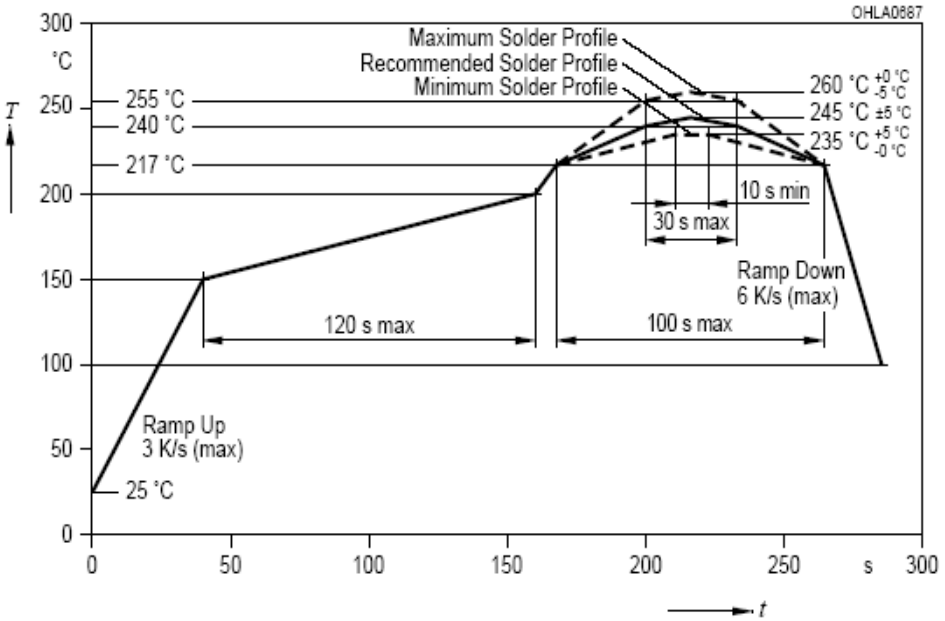

3.4 Electrical / Optical Characteristics at Ta=25°C

Parameter	Symbol	Part No. LTSA-	Min.	Typ.	Max.	Unit	Test Condition
Luminous Intensity	IV	E67RVAWTU	2240	-	4500	mcd	IF = 50mA Note 1
Viewing Angle	$2\theta_{1/2}$	E67RVAWTU	-	120	-	deg	Note 2 (Fig.2)
Peak Emission Wavelength	λP	E67RVAWTU	-	621	-	nm	Measurement @Peak (Fig.1)
Dominant Wavelength	λd	E67RVAWTU	612	-	621	nm	IF = 50mA Note 3
Spectral Line Half-Width	$\Delta\lambda$	E67RVAWTU	-	20	-	nm	
Forward Voltage	VF	E67RVAWTU	2.05	-	2.5	V	IF = 50mA Note 4
Reverse Current	IR	E67RVAWTU	-	-	10	μA	VR =10V Note 5

Notes:

1. Luminous intensity is measured with a light sensor and filter combination that approximates the CIE eye-response curve
2. θ1/2 is the off-axis angle at which the luminous intensity is half the axial luminous intensity.
3. The dominant wavelength, λd is derived from the CIE chromaticity diagram and represents the single wavelength which defines the color of the device. Dominate Wavelength Tolerance is +/- 1nm. ‘
4. Forward Voltage Tolerance is +/- 0.1 volt.
5. Reverse voltage (VR) condition is applied to IR test only. The device is not designed for reverse operation

4. Bin Rank

Batch Description on Label: Vf / Iv / Wd (Ex. D/X2/2)

■ **Vf Rank**

Forward Voltage (Vf)	Unit : V @50mA	
Bin Code	Min.	Max.
D	2.05	2.20
E	2.20	2.35
F	2.35	2.50

Tolerance on each Forward Voltage bin is +/-0.1 volt

■ **IV Rank**

Luminous Intensity (Iv)	Unit : mcd @50mA	
Bin Code	Min.	Max.
X2	2240	2800
Y1	2800	3550
Y2	3550	4500

Tolerance on each Intensity bin is +/-11%

■ **Wd Rank**

Dominant Wavelength (Wd)	Unit : nm @50mA	
Bin Code	Min.	Max.
3	612	615
4	615	618
5	618	621

Tolerance on each Wavelength bin is +/-1nm

5. Typical Electrical / Optical Characteristics Curves.

(25°C Ambient Temperature Unless Otherwise Noted)

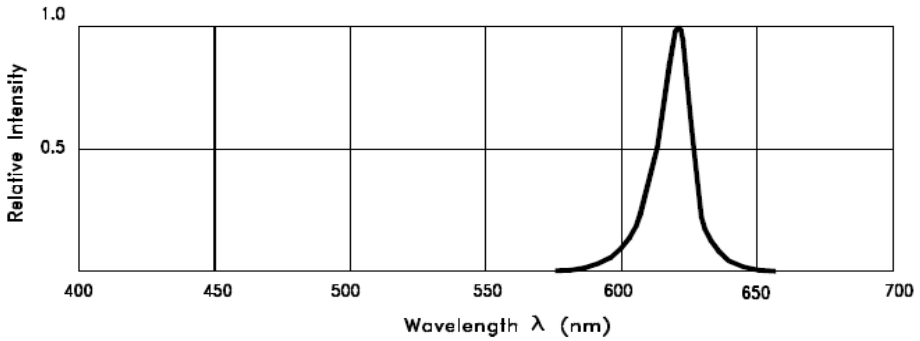

Fig.1 RELATIVE INTENSITY VS. WAVELENGTH

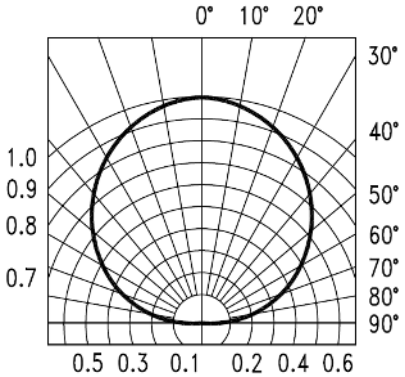

Fig. 2 SPATIAL DISTRIBUTION

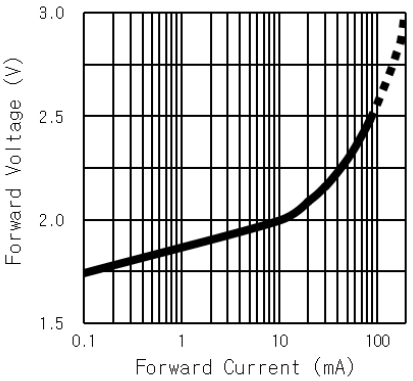

Fig. 3 FORWARD VOLTAGE V.S. FORWARD CURRENT

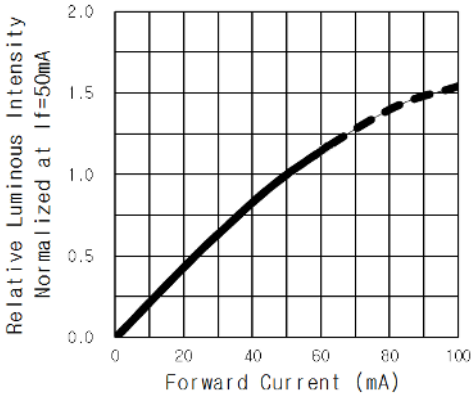

Fig. 4 RELATIVE LUMINOUS INTENSITY V.S. FORWARD CURRENT

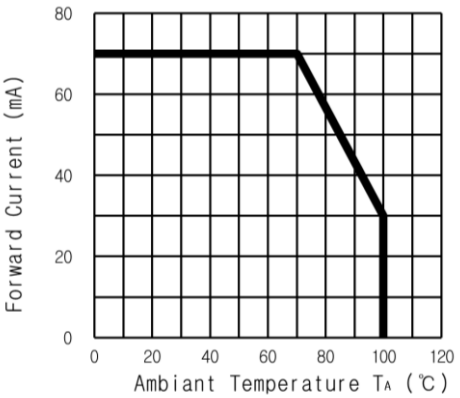

Fig.5 FORWARD CURRENT DERATING CURVE

6. User Guide

6.1 Cleaning

Do not use unspecified chemical liquid to clean LED they could harm the package. If cleaning is necessary, immerse the LED in ethyl alcohol or isopropyl alcohol at normal temperature for less one minute.

6.2 Recommend Printed Circuit Board Attachment Pad

Infrared / vapor phase

Reflow Soldering

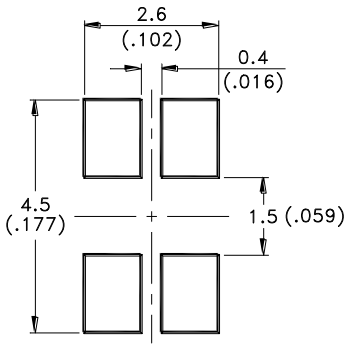

6.3 Package Dimensions of Tape And Reel

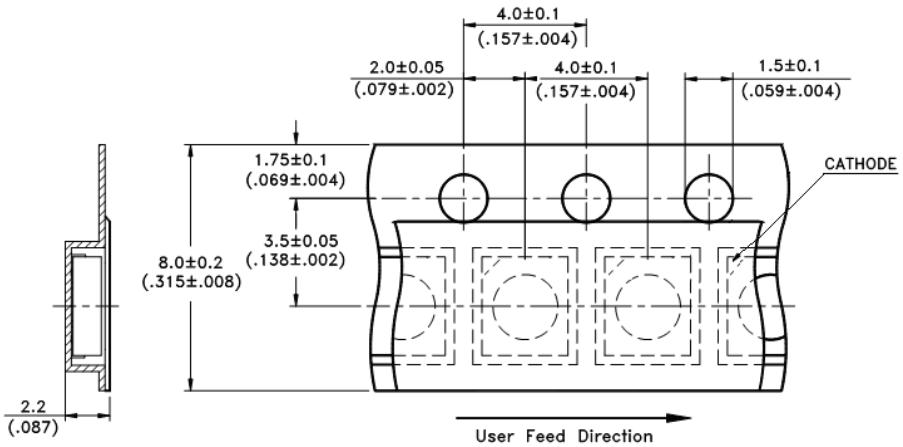

Note:

1. All dimensions are in millimeters (inches).

6.4 Package Dimensions of Reel

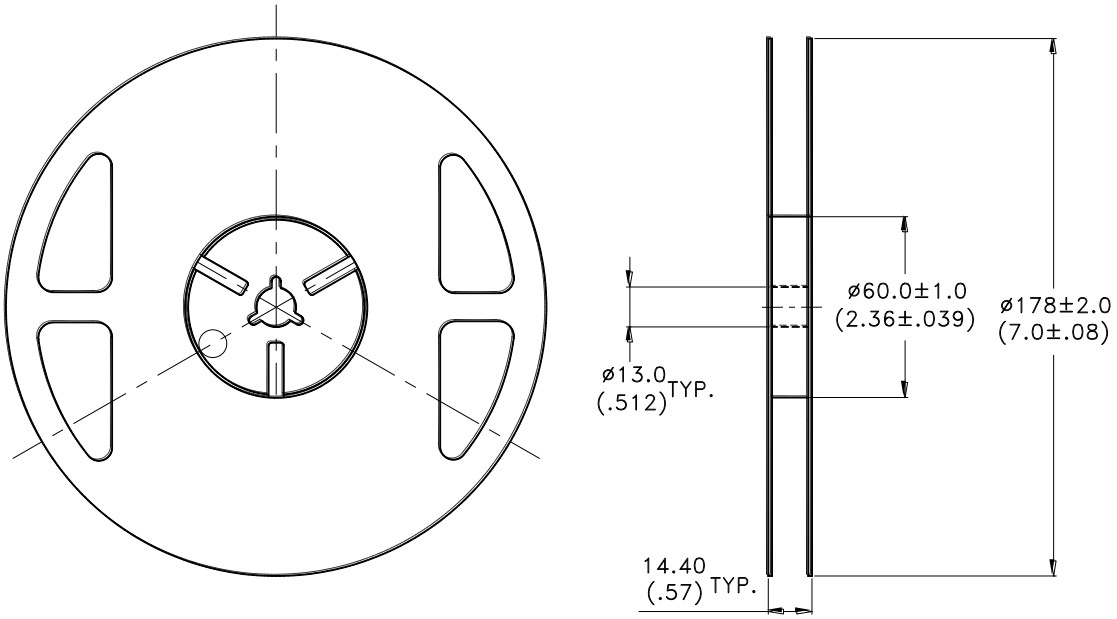

Notes:

i. Empty component pockets sealed with top cover tape.

ii. 7 inch reel 2000 pieces per reel.

iii. The maximum number of consecutive missing lamps is two.

iv. In accordance with ANSI/EIA 481 specifications.

7. Cautions

7.1 Application

The LEDs described here are intended to be used for ordinary electronic equipment (such as office equipment, communication equipment and household applications).Consult Liteon's Sales in advance for information on applications in which exceptional reliability is required, particularly when the failure or malfunction of the LEDs may directly jeopardize life or health (such as in aviation, transportation, traffic control equipment, medical and life support systems and safety devices).

7.2 Storage

This product is qualified as Moisture sensitive Level 2a per JEDEC J-STD-020 Precaution when handing this moisture sensitive product is important to ensure the reliability of the product.
The package is sealed:
The LEDs should be stored at 30°C or less and 70%RH or less. And the LEDs are limited to use within one year, while the LEDs is packed in moisture-proof package with the desiccants inside.
The package is opened:
The storage ambient for the LEDs should not exceed 30°C temperature and 60% relative humidity.
It is recommended that LEDs out of their original packaging are IR-reflowed within 4 weeks.
For extended storage out of their original packaging, it is recommended that the LEDs be stored in a sealed container with appropriate desiccant, or in a desiccators with nitrogen ambient.
LEDs stored out of their original packaging for more than 4 weeks should be baked at about 60 °C for at least 48 hours before solder assembly.

7.3 Cleaning

Use alcohol-based cleaning solvents such as isopropyl alcohol to clean the LED if necessary.

7.4 Soldering

Recommended soldering conditions:

Reflow soldering		Soldering iron	
Pre-heat Pre-heat time Peak temperature Soldering time	150~200°C 120 sec. Max. 260°C Max. 10 sec. Max.(Max. two times)	Temperature Soldering time	300°C Max. 3 sec. Max. (one time only)

Notes:

Because different board designs use different number and types of devices, solder pastes, reflow ovens, and circuit boards, no single temperature profile works for all possible combinations.
However, you can successfully mount your packages to the PCB by following the proper guidelines and PCB-specific characterization.
LITE-ON Runs both component-level verification using in-house **KYRAMX98** reflow chambers and board-level assembly. The results of this testing are verified through post-reflow reliability testing.Profiles used at LITE-ON are based on JEDEC standards to ensure that all packages can be successfully and reliably surface mounted.
Figure on page3 shows a sample temperature profile compliant to JEDEC standards. You can use this example as a generic target to set up your reflow process. You should adhere to the JEDEC profile limits as well as specifications and recommendations from the solder paste manufacturer to avoid damaging the device and create a reliable solder joint.

7.5 Drive Method

A LED is a current-operated device. In order to ensure intensity uniformity on multiple LEDs connected in parallel in an application, it is recommended that a current limiting resistor be incorporated in the drive circuit, in series with each LED as shown in Circuit A below.

Circuit model A

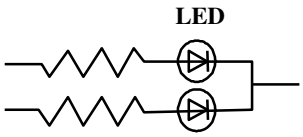

Circuit model B

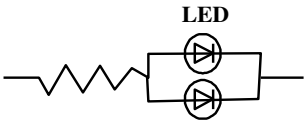

(A) Recommended circuit.
(B) The brightness of each LED might appear different due to the differences in the I-V characteristics of those LEDs.

7.6 ESD (Electrostatic Discharge)

Static Electricity or power surge will damage the LED.
Suggestions to prevent ESD damage:

- Use of a conductive wrist band or anti-electrostatic glove when handling these LEDs.
- All devices, equipment, and machinery must be properly grounded.
- Work tables, storage racks, etc. should be properly grounded.
- Use ion blower to neutralize the static charge which might have built up on surface of the LED's plastic lens as a result of friction between LEDs during storage and handling.

ESD-damaged LEDs will exhibit abnormal characteristics such as high reverse leakage current, low forward voltage, or " no lightup " at low currents.
To verify for ESD damage, check for " lightup " and Vf of the suspect LEDs at low currents.
The Vf of " good " LEDs should be >2.0V@0.1mA for InGaN product and >1.4V@0.1mA for AlInGaP product.

8. Reliability Test

No.	Test item	Test condition	# of Lots	Sample size Per Lot	Reference standard
2	Pre-conditioning	MSL 2a 125℃, 24 hrs baking Moisture Soak 60℃/60% 168 hrs Interval: 15mins ~ 4 hours to do IR-Reflow	3	385	JESD22 A-113
5b+	High Temperature Forward Bias (HTFB)	Ta=70 ± 2°C IF: 70mA 1000 hrs	3	77	JESD22 A-108
5b	High Temperature Forward Bias (HTFB)	Ta=100 ± 2°C IF: 30mA 1000 hrs	3	77	JESD22 A-108
7	Temperature Cycle (TC)	-40°C(+0, -10) to 100°C(+15,-0) 10 min 10 min 10 min 1000 cycles	3	77	JESD22 A-104 Appendix 6
9a	High Temperature High Humidity Bias (HTHHB)	Ta=85 ± 2°C, 85 ± 5% RH IF: 50mA 1000 hrs	3	77	JESD22 A-101
10alt	Power and Temperature Cycle (PTC)	-40°C (+0, -10) to 85°C (+10,-0) 10 min 20 min 10 min IF: 50mA 1 cycle: 2 min. on / 2 min. off 15000 cycles (1000 hrs)	3	77	JESD22 A-105
11	ESD Characterization	HBM 2000V, CDM 1000V	1	30 each HBM/CDM	AEC Q101-001, and Q101-005
20	Resistance to Solder Heat	Tsld=260°C, 10sec. 3times	1	30	JESD22A-111
21	Solderability	Tsld = 245± 5°C, 5sec, Leas-free Solder	1	10	J-STD-002 JESD22B102

Note: ESD Characterization is only for reference.

9. Others

The appearance and specifications of the product may be modified for improvement without prior notice.

10. Suggested Checking List

Training and Certification

1. Everyone working in a static-safe area is ESD-certified?
2. Training records kept and re-certification dates monitored?

Static-Safe Workstation & Work Areas

1. Static-safe workstation or work-areas have ESD signs?
2. All surfaces and objects at all static-safe workstation and within 1 ft measure less than 100V?
3. All ionizer activated, positioned towards the units?
4. Each work surface mats grounding is good?

Personnel Grounding

1. Every person (including visitors) handling ESD sensitive (ESDS) items wears wrist strap, heel strap or conductive shoes with conductive flooring?
2. If conductive footwear used, conductive flooring also present where operator stand or walk?
3. Garments, hairs or anything closer than 1 ft to ESD items measure less than 100V*?
4. Every wrist strap or heel strap/conductive shoes checked daily and result recorded for all DLs?
5. All wrist strap or heel strap checkers calibration up to date?

Note: *50V for InGaN LED.

Device Handling

1. Every ESDS items identified by EIA-471 labels on item or packaging?
2. All ESDS items completely inside properly closed static-shielding containers when not at static-safe workstation?
3. No static charge generators (e.g. plastics) inside shielding containers with ESDS items?
4. All flexible conductive and dissipative package materials inspected before reuse or recycles?

Others

1. Audit result reported to entity ESD control coordinator?
2. Corrective action from previous audits completed?
3. Are audit records complete and on file?